AIRIUS®
saving you energy

AIRIUS CEILING KIT MOUNTING GUIDELINES - Model 45 (Option 1)

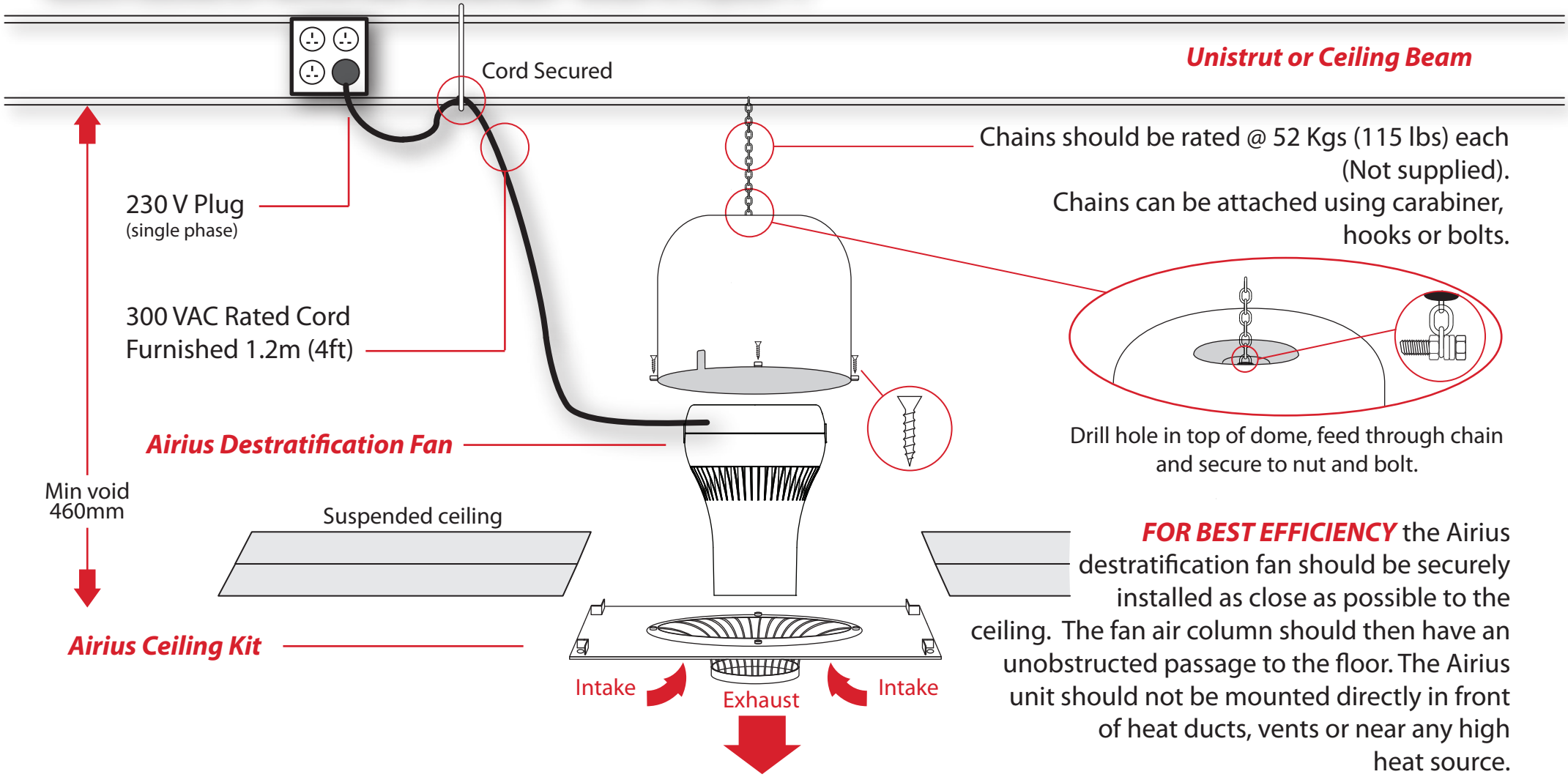

FOR BEST EFFICIENCY the Airius destratification fan should be securely installed as close as possible to the ceiling. The fan air column should then have an unobstructed passage to the floor. The Airius unit should not be mounted directly in front of heat ducts, vents or near any high heat source.

Holwell Farm, Cranborne
Dorset BH21 5QP

E: airflow@airius.co.uk
W: www.airius.co.uk

Office: +44 (0)1202 554200
Fax: +44 (0)1202 554396

AIRIUS®, AIR PEAR®, and THE THERMAL EQUALIZER® are trademarks of Airius, LLC, registered in the U.S. and in some countries abroad. Other trademarks pending in the U.S. and abroad.

AIRIUS®
saving you energy

AIRIUS CEILING KIT MOUNTING GUIDELINES - Model 45 (Option 2)

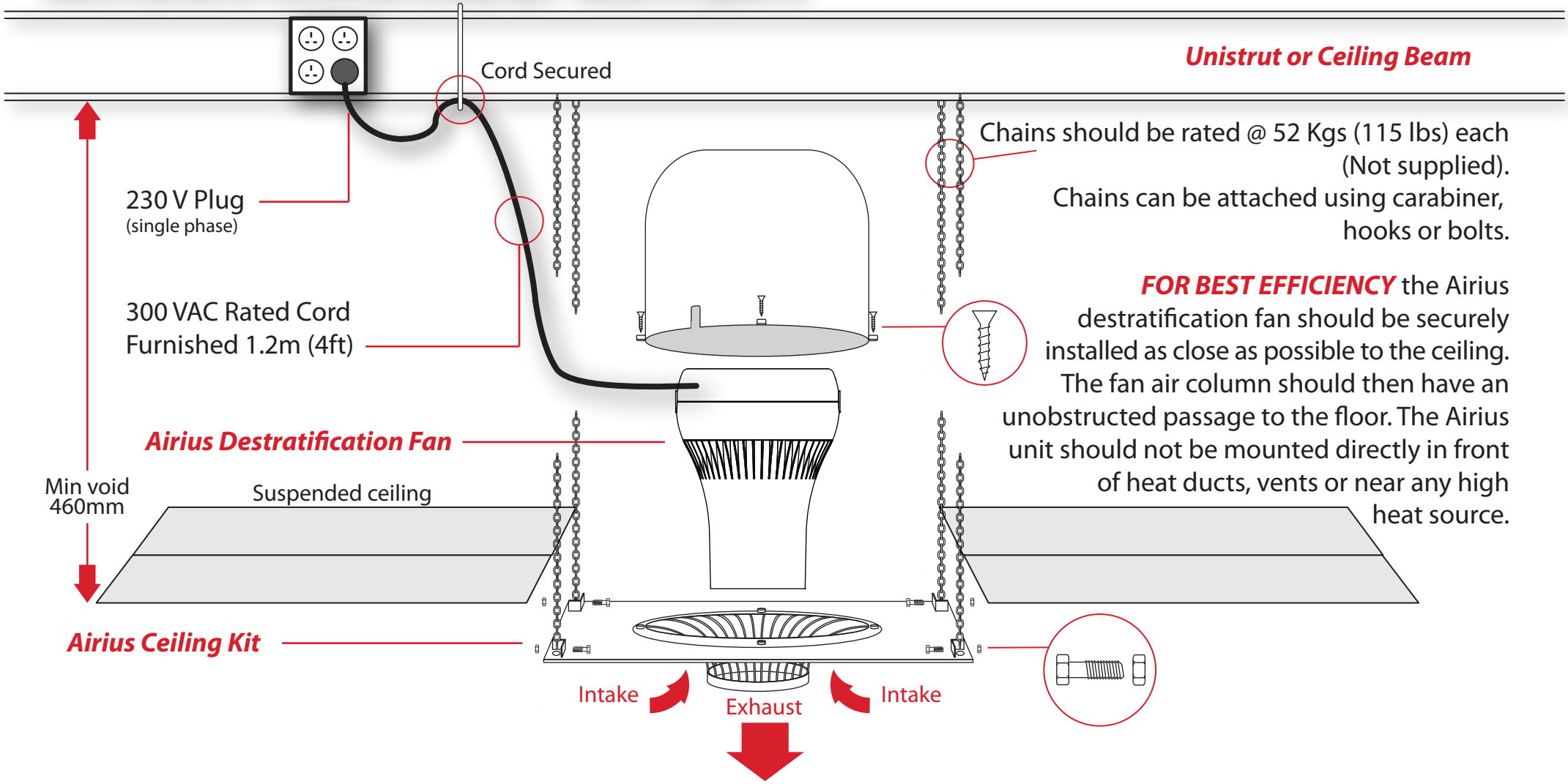

Holwell Farm, Cranborne
Dorset BH21 5QP

E: airflow@airius.co.uk
W: www.airius.co.uk

Office: +44 (0)1202 554200
Fax: +44 (0)1202 554396

AIRIUS®, AIR PEAR®, and THE THERMAL EQUALIZER® are trademarks of Airius, LLC, registered in the U.S. and in some countries abroad. Other trademarks pending in the U.S. and abroad.